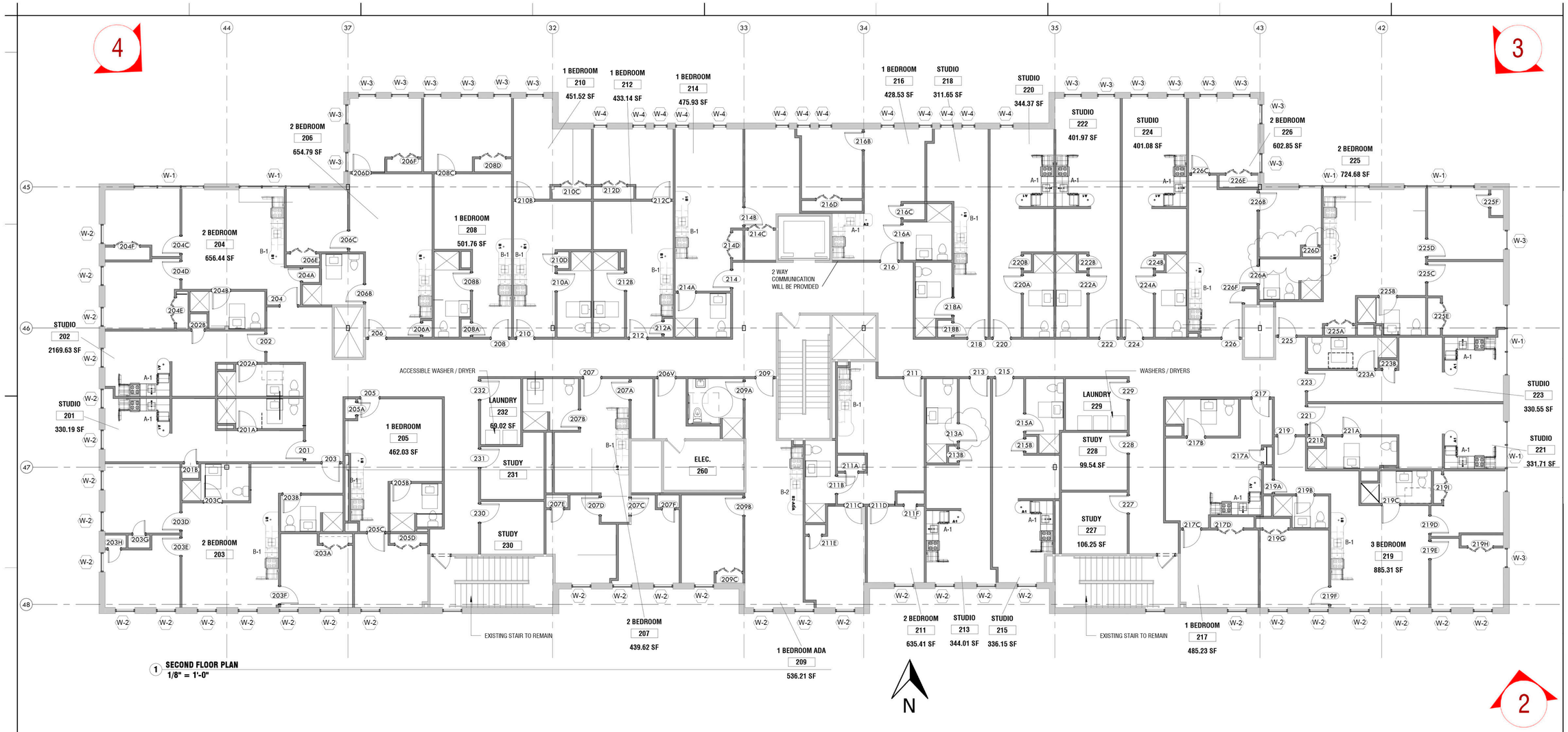

1 SECOND FLOOR PLAN
1/8" = 1'-0"

2. EXISTING PHOTO

3. EXISTING PHOTO

4. EXISTING PHOTO

1/8/2019 10:59:54 AM ©COPYRIGHT ALLOYS ARCHITECTURE

PROJECT
POLK STREET HOUSING

THIRD STREET
BETHLEHEM, PA 18015

OWNER
ASHLEY DEVELOPMENT

559 MAIN STREET,
BETHLEHEM, PA 18018

PROJECT TEAM

ARCHITECT
ALLOYS ARCHITECTURE

MEP
ProjectX Design Group
2433 Blue Jay Dr.
Nazareth, PA 18064

SUBMISSIONS

NO.	ISSUE DESCRIPTION	DATE
-	-	-

REGISTRATION
ALLOY5 ARCHITECTURE
ALLOYS ARCHITECTURE
530 WEST BROAD ST
BETHLEHEM, PA 18018
610.419.4055

SHEET TITLE
SECOND FLOOR PLAN

DATE	05/03/19
SCALE	1/8" = 1'-0"
DRAWN BY	Author
CHECKED BY	Checker
JOB NO.	0000.00

A1.01

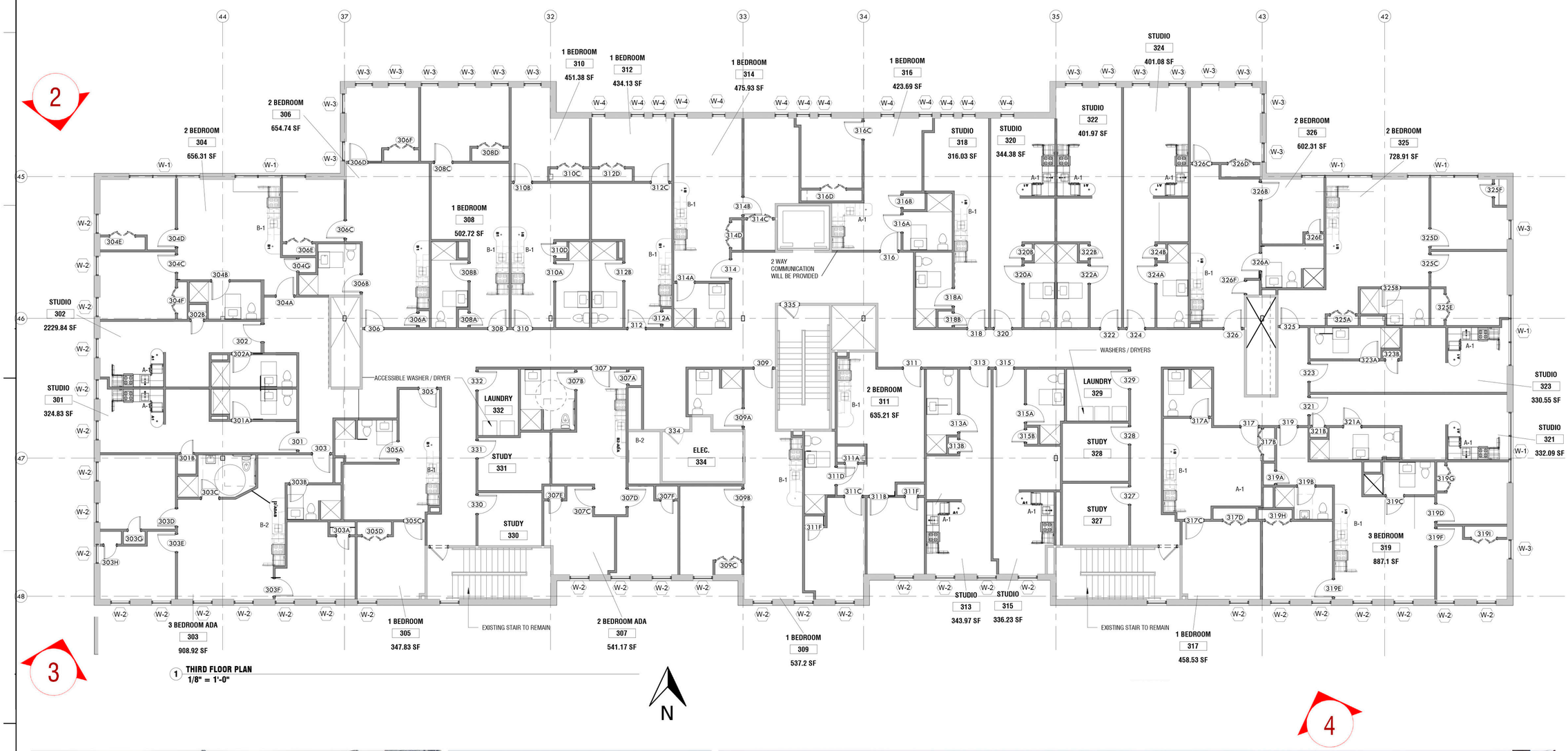

1 THIRD FLOOR PLAN
1/8" = 1'-0"

2. EXISTING PHOTO - NEIGHBORING BUILDING

3. EXISTING PHOTO

4. EXISTING PHOTO

1/8/2019 11:07:51 AM ©COPYRIGHT ALLOY5 ARCHITECTURE

PROJECT
POLK STREET HOUSING

THIRD STREET
BETHLEHEM, PA 18015

OWNER
ASHLEY DEVELOPMENT

559 MAIN STREET,
BETHLEHEM, PA 18018

PROJECT TEAM

ARCHITECT
ALLOY5 ARCHITECTURE

MEP
ProjectX Design Group
2433 Blue Jay Dr.
Nazareth, PA 18064

SUBMISSIONS

NO.	ISSUE DESCRIPTION	DATE

REGISTRATION

ALLOY5 ARCHITECTURE
ALLOY5 ARCHITECTURE
530 WEST BROAD ST
BETHLEHEM, PA 18018
610.419.4055

SHEET TITLE
THIRD FLOOR PLAN

DATE	05/03/19
SCALE	1/8" = 1'-0"
DRAWN BY	Author
CHECKED BY	Checker
JOB NO.	0000.00

A1.02

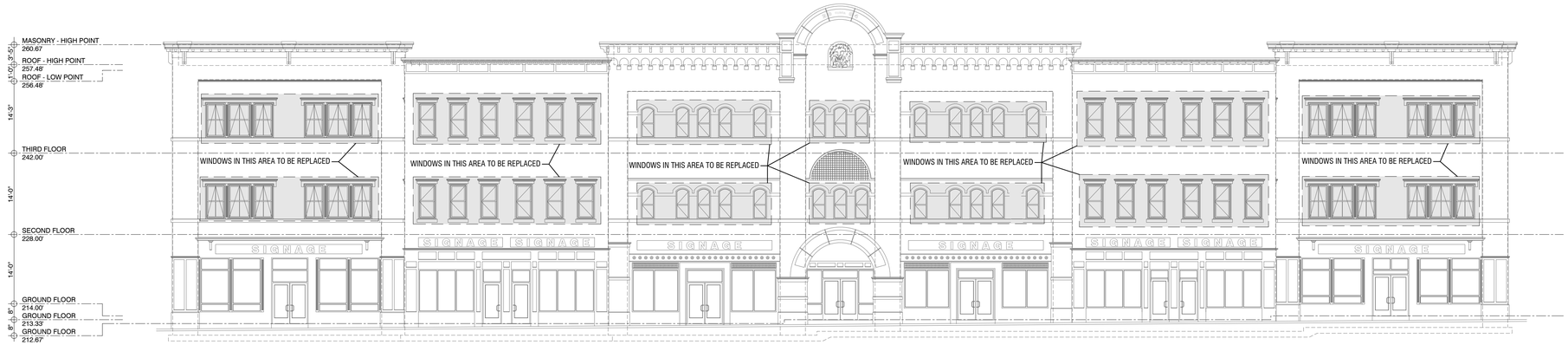

1 **NORTH ELEVATION**
3/32" = 1'-0"

2 **SOUTH ELEVATION**
3/32" = 1'-0"

3 **WEST ELEVATION**
3/32" = 1'-0"

4 **EAST ELEVATION**
3/32" = 1'-0"

5/3/2019 9:38:40 AM ©COPYRIGHT ALLOY5 ARCHITECTURE

PROJECT
POLK STREET HOUSING

THIRD STREET
BETHLEHEM, PA 18015

OWNER
ASHLEY DEVELOPMENT

559 MAIN STREET,
BETHLEHEM, PA 18018

PROJECT TEAM

ARCHITECT
ALLOY5 ARCHITECTURE

MEP
ProjectX Design Group
2433 Blue Jay Dr.
Nazareth, PA 18064

SUBMISSIONS

NO.	ISSUE DESCRIPTION	DATE
.	.	.

REGISTRATION

ALLOY5 ARCHITECTURE
530 WEST BROAD ST
BETHLEHEM, PA 18018
610.419.4055

SHEET TITLE
EXTERIOR ELEVATIONS

DATE	05/03/19
SCALE	3/32" = 1'-0"
DRAWN BY	Author
CHECKED BY	Checker
JOB NO.	0000.00

A2.00

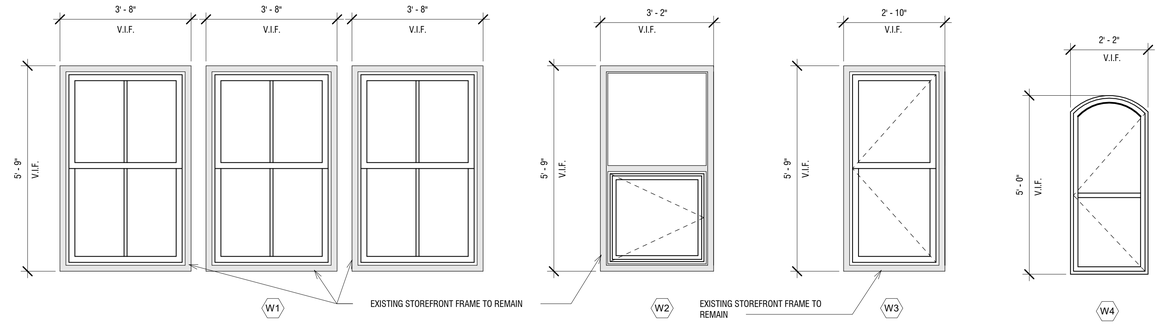

1 TYPICAL SIGNAGE DETAILS
1/2" = 1'-0"

*BACKER ROD AND SEALANT BOTH SIDES OF ANY NEW WINDOW BEING INSTALLED. PATCH AND REPAIR ANY EXTERIOR / INTERIOR WALLS, SILLS ETC. THAT MAY BE DAMAGED DURING INSTALLATION OF NEW WINDOWS.

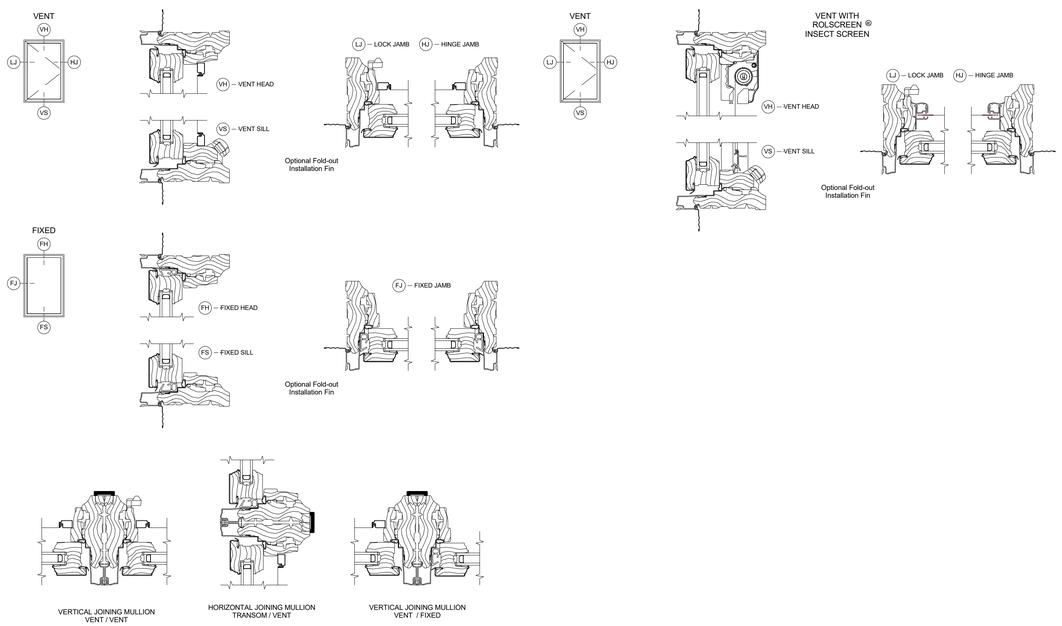

3 TYPICAL SIGNAGE DETAILS
3" = 1'-0"

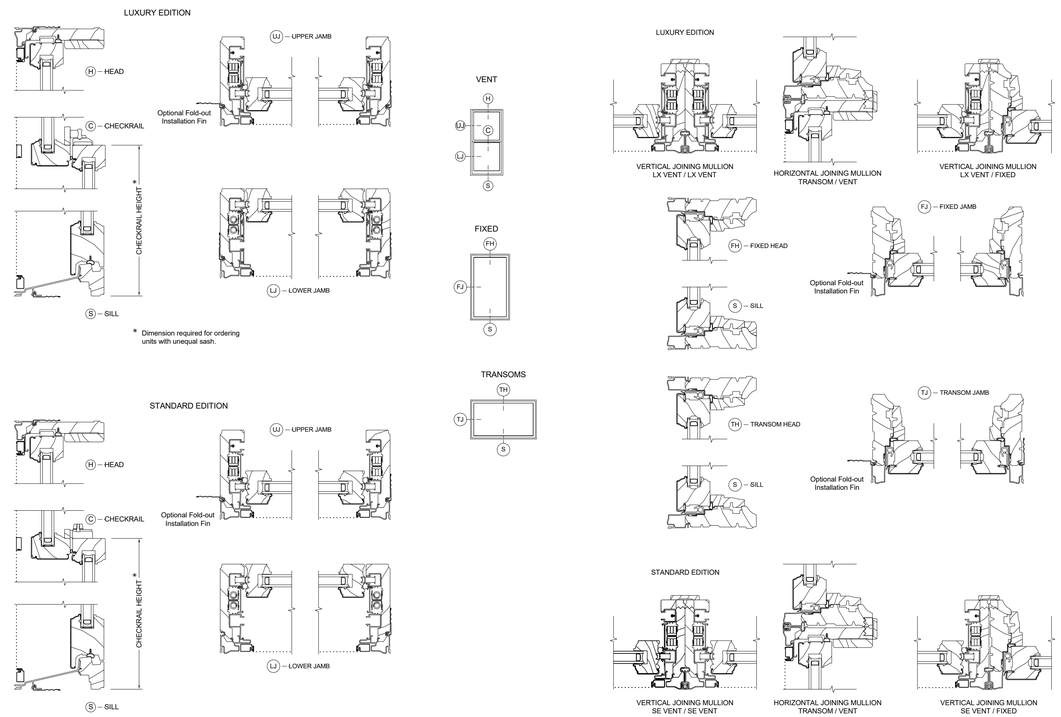

2 TYPICAL SIGNAGE DETAILS
3" = 1'-0"

5/3/2019 10:10:23 AM ©COPYRIGHT ALLOYS ARCHITECTURE

PROJECT
POLK STREET HOUSING

THIRD STREET
BETHLEHEM, PA 18015

OWNER
ASHLEY DEVELOPMENT

559 MAIN STREET,
BETHLEHEM, PA 18018

PROJECT TEAM

ARCHITECT
ALLOYS ARCHITECTURE

MEP
ProjectX Design Group
2433 Blue Jay Dr.
Nazareth, PA 18064

SUBMISSIONS

NO.	ISSUE DESCRIPTION	DATE

REGISTRATION

ALLOYS ARCHITECTURE
530 WEST BROAD ST
BETHLEHEM, PA 18018
610.419.4055

SHEET TITLE
WINDOW DETAILS

DATE	05/03/19
SCALE	As indicated
DRAWN BY	Author
CHECKED BY	Checker
JOB NO.	0000.00

A6.00